Proceedings of the 4th International Conference on Computing Innovation and Applied Physics
DOI: 10.54254/2753-8818/2025.22736

Review about The Vibration Characteristics of Vehicle Suspension Systems

Fengyue Zhang[1*], Leqi Rong[2], Yuexiang Chen[3], Yiheng Wang[1], Yuxuan Li[4], Rongxi Sun[5]

[1]*Jinan Foreign Language School, Jinan, China*
[2]*Suzhou High School of Jiangsu Province, Suzhou, China*
[3]*Jin Ling High School Hexi Campus, Nanjing, China*
[4]*Beijing Academy of Beijing Municipality, Beijing, China*
[5]*Bachuan Quantum Middle School, Chongqing, China*
**Corresponding Author. Email: 13031703305@163.com*

Abstract: These days, people want to have a better driving and riding experience. To this reason, improve the performance of the suspension system become a very useful solution. In addition, suspension system is widely used in different places of people's daily life. Therefore, the study of suspension systems is very promising and very important. This article will discuss about how to analysis the vibration of the car system and the destruction of the different types of the suspension system. It also include the analysis of the different kinds of the vibration control technology. The document points out many new technology and perfect materials can be used in the car system. After that, the article talks about the practical application on the real cars. The meaning of this article is to summarize the develop situation of the suspension system and point out the useful ways to improve the performance suspension system.

Keywords: vibration characteristics, suspension system, vibration control.

1. Introduction

Nowadays, the comfort and stability of vehicles are very important to a car. These two performances are closely related to the automobile suspension system(like Fig.1). The car suspension system is one of the important components of the car, which can help the car pass through bumps and uneven roads more smoothly during driving. The main function of the suspension system is to connect the body with the wheels, and improve the stability and comfort of the vehicle through shock absorption and support. When driving, the suspension system can help the wheels follow the shape of the ground and transmit the power of road bumps and vibration to the body, thus improving the stability of the vehicles.

© 2026 The Authors. This is an open access article distributed under the terms of the Creative Commons Attribution License 4.0 (https://creativecommons.org/licenses/by/4.0/).

DOI: 10.54254/2753-8818/2025.22736

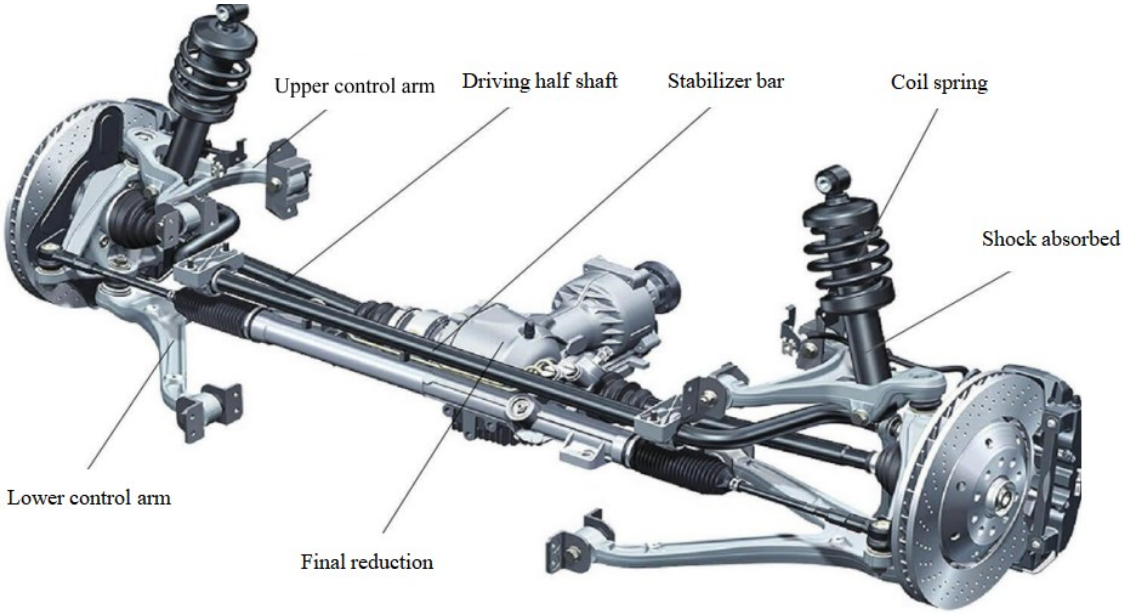

Figure 1: Suspension system

However, as an important factor affecting the automotive industry. The car suspension system still face a series of challenges. When facing some challenges, the suspension system also needs to take corresponding countermeasures. First of all, the suspension system needs to have the ability to respond quickly. Accurate adjustment to ensure the stability and comfort of the vehicles. Secondly, the design and adjustment of the suspension system needs to take account the dynamic characteristics and negative forces of the vehicle to meet the challenges near the frequency of wheel movement. This requires suspension system to be highly flexible and accurate. Factors such as lodgings conditions and driving habits to ensure the stability and comfort of the vehicle under different driving conditions. In order to meet these challenges, automobile manufactures need to continuously improve the technical level of the suspension system and adopt advanced control algorithms and materials to ensure that the suspension system can play the best performance under various circumstances.

2. Shock absorption control classification

2.1. General

The suspension system of the car is a vital part of the car to maintain comfort and stability, the current mainstream suspension system mainly has the following three types: active suspension system, passive suspension system and semi-active suspension system, in addition, intelligent control technology is also widely used in semi-active system and active system, as an effective way to adjust the coefficient of damping and spring stiffness.

2.2. Passive systems

As a relatively mature suspension system, the cost of ownership is low, the technology is mature, there is no need to adjust the damping and stiffness coefficient, the structure is relatively simple, and there is no demand for the control system. However, at the same time, the passive system cannot actively adjust the stiffness coefficient and damping coefficient, and cannot adapt to the changing road conditions, so that its adaptability and performance are relatively poor, and the optimal control and comfort cannot be achieved.

DOI: 10.54254/2753-8818/2025.22736

2.3. Semi-active system

2.3.1. Overall

Semi-active system refers to the suspension system, which is one of the two adjustable spring rate and damping, and the current mainstream trend is the variable damping system, which can change the damping suspension system by changing the road surface conditions. This suspension system is lower in cost than the active system, the technology is relatively mature, overcomes the shortcomings of poor adaptability of passive suspension, is conducive to adapting to changing road conditions, and has greatly improved the performance of the suspension system. However, the cost of semi-active systems is also higher than that of passive systems, and the structure is more complex.

The principle of the semi-active system is to calculate the optimal control curve in advance, apply it to the actual driving situation, and change the damping coefficient of the vehicle in time according to the road surface excitation obtained by sensors or other sources, so that the vehicle can adapt to different road conditions and give passengers the best possible handling and comfort.

2.3.2. Example

Zhang Yiming and Lin Ye [1] from Beijing Institute of Technology calculated the optimal control law of the two-degree-of-freedom vehicle suspension model, simplified the system by approximating the mass distribution coefficient, and established the model (Fig.2 below).

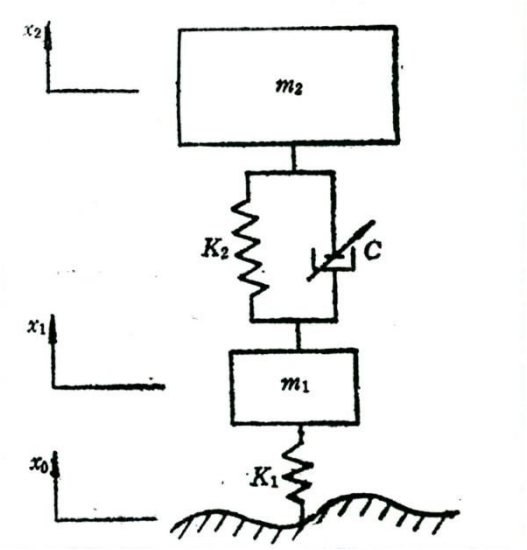

Figure 2: Two-degree-of-freedom vehicle suspension system model

It becomes a two-degree-of-freedom system with damping coefficient and stiffness, and finally the optimal control law of suspension damping is obtained. (Fig.3 below)

DOI: 10.54254/2753-8818/2025.22736

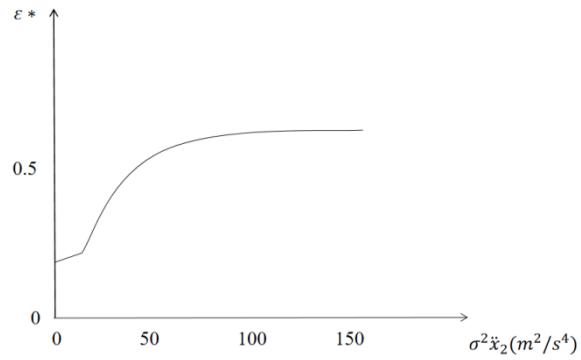

Figure 3: Optimal control rate of suspension damping

2.4. Active systems

Active system refers to the suspension system that the spring rate and damping are all adjustable, and the current active suspension system has electric active suspension, etc., this type of system mainly has strong adaptability, strong suspension system performance, comfort and control during riding are very high, and can also adapt in the face of changeable road conditions. However, at the same time, because of its high cost, complex structure and other defects, it is difficult to be accepted by the public, and there are only a few product applications in the market.

The principle of the active system is to make the car actively adapt to changing road conditions by changing multiple factors such as vehicle height, damping coefficient and stiffness coefficient. The complexity of the system is much higher than that of semi-active and passive systems, but it can achieve better comfort and control.

Sun Feng et.al [2] from Shenyang University of Technology tried the application of robust control strategy in active suspension, introduced a motor on the basis of passive suspension, established an active suspension model (as shown in Fig.4), and then calculated the required weighting coefficient to obtain the driving conditions of active suspension compared with passive suspension on different road surfaces. Fig.5 shows the vertical acceleration of a passive and active suspension vehicle on a sinusoidal road surface at a speed of 45 km/h

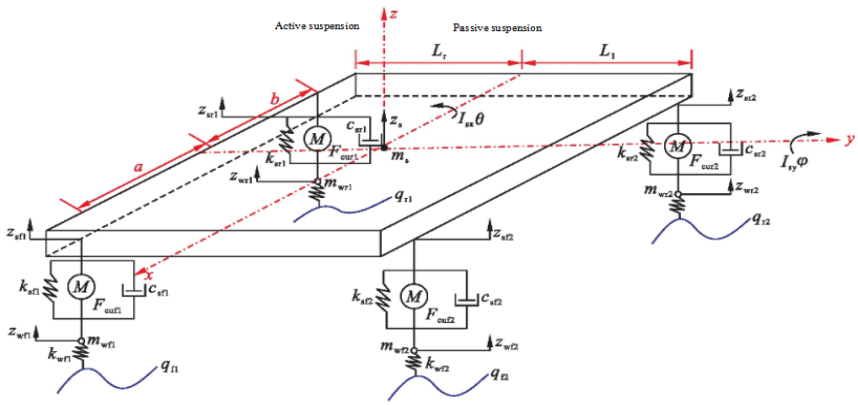

Figure 4: 7-DOF model for electromagnetic active suspension of whole vehicle

DOI: 10.54254/2753-8818/2025.22736

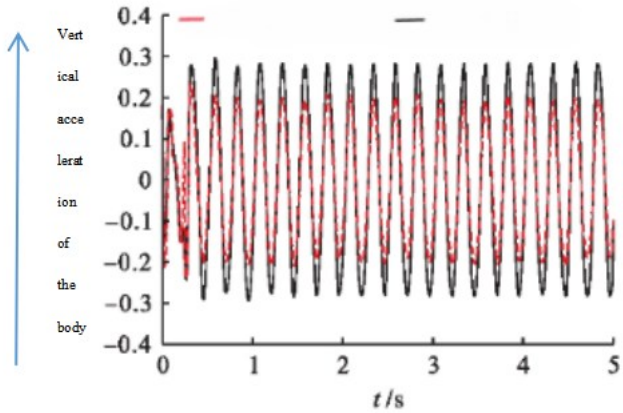

Figure 5: Vertical body acceleration

3. Vibration analysis

3.1. General

Vibration analysis important for evaluating the effectiveness and the states of the suspension system applied on the vehicle. The vibration analysis can help to improve technology and expose the damage of vehicles.

3.2. Process

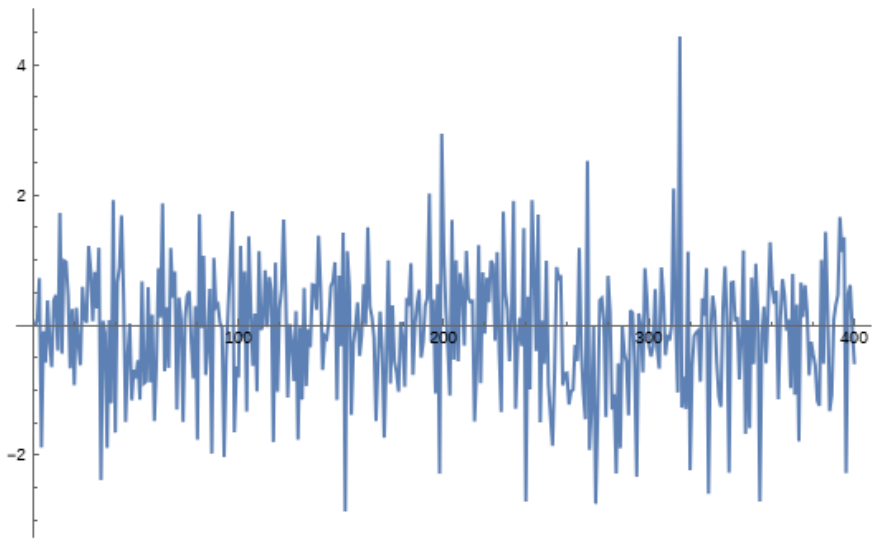

Figure 6: ARMR

In order to construct a mathematical model of vibration, one need many experiments. A research of Computer and Automation Research Institute of Hungarian Academy of Sciences [3] aims to put devices on buses to collect data form its daily operation. The data form the experiment need to be treated with non-parametric and parametric (auto-regressive models, auto-regressive moving-average model (as shown in Fig.6)) spectral analysis to minimize the influence of noise and other factors. With sufficient data, one can construct uncertainty model used for solving real-life problem.

DOI: 10.54254/2753-8818/2025.22736

4. Vibration control technology

4.1. General

Today, there are three main types of the vibration control devices: passive, Semi-active and the active systems. These three vibration control devices come from three different Corresponding suspension system. Each of these three types of shock absorption has its own characteristics and different structure. This part will talk about the three vibration control devices in this part.

4.2. Passive vibration control device

The passive vibration control device is a part of the passive suspension system, it has the structure like Fig.7.

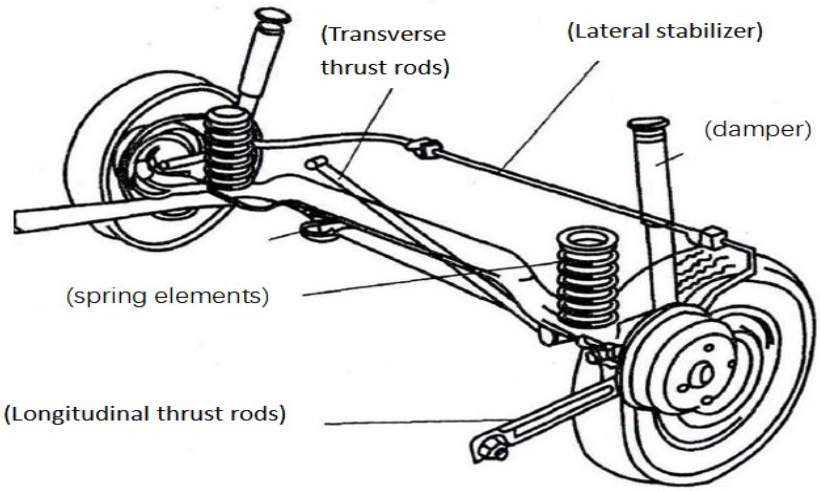

Figure 7: Suspension system structure [4]

In the traditional passive, the stiffness and damping ratio are already fixed at the time of design, so they can not been change. As the Elastomeric elements use their deformation to absorbed energy. Then as the moving of the springs, the damper will turn the kinetic energy into the heat energy, then can reduce the motion of the car system.

Use the Gas shock absorbers as an example(Fig.8).

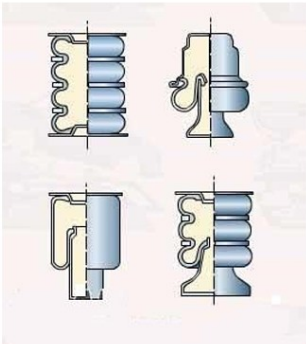

Figure 8: Gas shock absorbers

DOI: 10.54254/2753-8818/2025.22736

The device is Filled with compressed gas which can reduce the vibration energy of the car system and turn it to the heat energy. The stiffness of this spring is variable, the load increases, the stiffness increases, and the load decreases, stiffness decreases [4].

4.3. Semi-active

The most important different from the passive system is that the damping ratio of the semi-active system can be changed. There are many sensors around the car to collect the data of the vibration of the car itself and the road conditions. Then the car's damper will change the parameter to make sure the stable of the car and make the passenger more comfortable. Obviously, the semi-active vibration control device is much better than the passive one. Since the semi-active has a good balance between the price and the abilities, so it becomes a perfect choice for many different types of cars.

4.4. Active

Besides using the damper to reduce the vibration, the active system devices can change the stiffness of the springs and height of the car to the vibration of the car. There are plenty of the sensors around the cars to know the situation of the ground surface and the vibration degree of the car, then computer will find how to change the three main parameters of the car to minis the vibration. Because it had collected many data and can change the height, spring, damper these three important parts, it can reduce vibration much more accurate, flexible and quicker. So, this type of the vibration control technology can make the person in the car have the most comfortable feeling and make the car most stable. However, the active vibration control system also has some negative points like the price is very high and the structure is to complex, which means it can't be used in all kinds of cars.

4.5. New technology and smart materials

4.5.1. The definition of the shape memory material

The definition of the shape memory material: After plastic deformation occurs, it can be heated above a certain temperature to return to the shape which before performance, this phenomenon is called shape memory Effect [5]. Therefore, IF the SMA is at the suitable temperature, since the shape of it just like don't influence by the loading, it can keep on reduce the vibration energy (large number) in to other form. This new kind of material can be widely use in the cars vibration control system because of its special creature.

Compare the vibration control system which use the shape memory material with another one not use it.

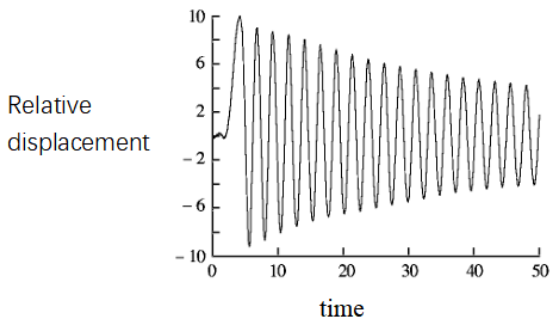

Figure 9: Without the SMA hyperplastic damper installed [6]

DOI: 10.54254/2753-8818/2025.22736

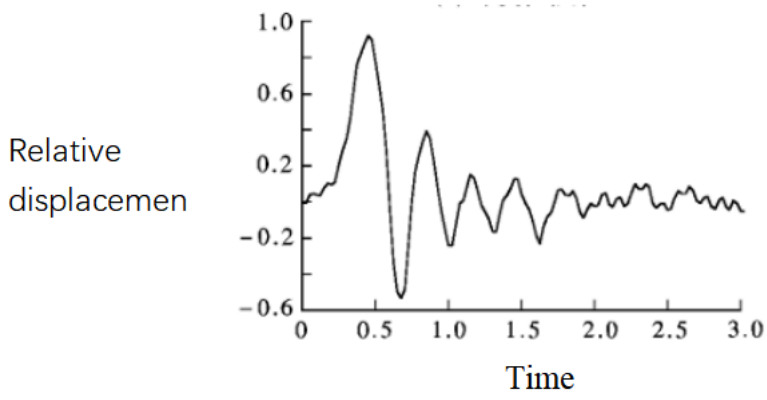

Figure 10: With the SMA hyperplastic damper installed [6]

Fig. 9 shows the frame without the SMA hyperplastic damper installed vibration Attenuation diagram. Figure 10 shows the box for installing the SMA hyperplastic damper. Vibration attenuation diagram of the frame. As can be seen from Figure 9, install the SMA cable the time for the frame to decay from the initial displacement to half the initial displacement is about 45s. As can be seen from Figure 10, the frame on which the damper is mounted is under the same conditions the decay time is less than 0.4s [6]. To this reason, this new material application can make the vibration control have better efficiency.

4.5.2. Electromagnetic damper

These days, to control the damping parameter quicker and more accurate, people start using the electromagnetic damper instead of the normal oil and gas dampers. The core component of an electromagnetic damper is a magnetorheological fluid. This liquid contains magnetic particles, when a magnetic field is applied, form a chain-like structure in the liquid, which changes the rheological properties of the liquid and makes it noticeably more viscous. Then the dampers force can increase. Electromagnetic dampers contain electromagnets (usually coils) that generate an adjustable magnetic field by applying electricity. This magnetic field affects the rheological properties of the magnetorheological fluid which can Indirect impact the damper force. Therefore, change the strength of the field by changing the damper force.

In addition, for step excitation and the body sag is electromagnetic damper, the direct acceleration and suspension deflection are smaller than the normal damper, which indicates the damping provides better isolation when passing through large obstacles vibration effect. Thus, it can be illustrated as long as we can design the electromagnetic damper which has the same parameter with the oil and gas damper, the electromagnetic damper can have a better damping effect, this is the design of electromagnetic dampers and the improvement provides a theoretical basis [7].

4.6. Summary

In a word, the active vibration control system is the most promising one. The price of the active system will drop as the development of the technology. Because it has many benefit like high intelligence, strong adaptability, high accuracy and quickly response. In addition, new materials and new technology are useful ways to improve the cars vibration control abilities which is very important.

5. Practical application

There are different kinds of car suspension systems in our daily life. Each of the suspension system is responsible for some specific use. For civilian vehicle, independent suspension systems are widely

DOI: 10.54254/2753-8818/2025.22736

used. In this type of suspension system, the unsparing mass can be kept low. Moreover, if one of the wheels hits an irregularity it won't upset the wheels on the other side on the same axle.

McPherson Strut Suspension is one of the independent suspension systems (show at Fig.11, and it is common in modern sedan car. It contains a spring and a shock absorber unit called a strut. Its upper end is located in a moulded rubber mounting. The lower end of the strut is connected by a ball joint which is embedded to the tail of the suspension control arm.

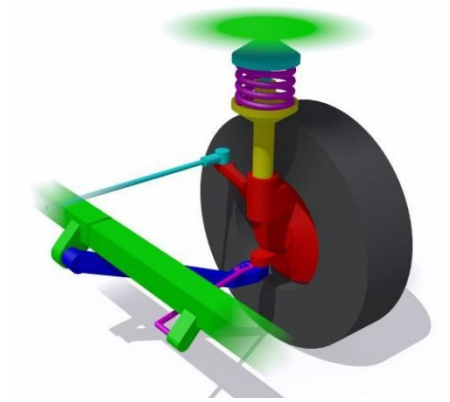

Figure 11: McPherson Strut Suspension [8]

This kind of suspension system is used in cars like Ford Focus and Honda Civic. Double Wishbone Suspension is also an independent suspension system(Fig.12). This system often appears commonly in premium sedans and sporty SUVs, it provides better wheel alignment and comfort, helping to improve vehicle handling and ride stability. It shaped like the letter "A" and each arm has two moveable joint connected to the chassis and one arm connected to Knuckle. Shock absorber and spring are installed to control the amount of movement in vertical direction. Moreover, by using this system, many parameters in the system can be regulated to optimize the wheel motion and have a better experience while driving on some irregular road.

Figure 12: Double Wishbone Suspension

Both BMW3 Series and Audi A4 uses this type of suspension system. For commercial vehicles, both independent and non-independent systems are utilized in different types of cars.

Air Suspension is a commonly used system in commercial vehicles (show at Fig.13). The purpose of the system is to provide a smooth and constant ride quality. This type of system has a big air pump or compressor controlled by a complex electrical system. The air is transferred by the pump in to a bellow made from textile-reinforced rubber and then raise the chassis from the axle.

DOI: 10.54254/2753-8818/2025.22736

Figure 13: Air Suspension [9]

For instance, Mercedes-Benz Actros, a heavy-duty truck focus on comfort and supporting heavy body has mount an air suspension. MAN TGS: another heavy-duty commercial vehicle with an air suspension system to adapt to different load conditions.

Leaf spring Suspension is a simple form of suspension system(Fig.14). It consists multiple curved thin metal plates. The plates attached to each other and are typically made of steel. They are often mounted to the vehicles' axle and chassis. The leaf springs are designed to support the weight of the vehicle, absorb the energy caused by irregular roads, and help keep the vehicles' axle align with the chassis. The curvature of the springs allows them to flex and distribute the load uniformly.

Figure 14: Leaf Spring Suspension

Leaf Spring Suspension are used in trucks called Chevrolet Silverado 3500HD and Ford F-250.

On the other hand, there are some special cars like sports cars and off-road vehicles. Porsche 911, this high-performance sports car is equipped with sports suspension that can adjust according to the driving conditions to optimize handling and comfort. Lamborghini Huracán is installed a special Dynamic Suspension in order to adjust suspension stiffness in real time to adapt different driving conditions. Jeep Wrangler: off-road vehicle that has a long-travel suspension and high ground clearance to adapt to complex off-road terrain. Cadillac Escalade: off-road vehicle with adjustable air suspension to adapt to various road conditions and reinforce off-road capabilities.

6. Advance research and future trend

6.1. General

In 2013, a paper published by International Conference on Emerging Trends in Technology and its Applications suggested that the electromagnet active suspensions will be the future trend because of the good performance and the easily accessible materials [10]. The research of Min Yu from Department of Mechanical Engineering, Imperial College London [11] shows at the sales of electric vehicle increase from 1.3×10^6 units to 4.3×10^6 units form 2018 to 2021. The rapid increase in sales

DOI: 10.54254/2753-8818/2025.22736

of electric vehicle make the choice more reasonable. The electrical active suspension system can share the energy of the engine.

6.2. Control strategies

The developments of electric vehicle and AI make it possible to control multiple parts of the car with electricity. The future control strategies will control the car as a system to ensure a comfortable drive. The control strategies may even control multiple cars.

6.3. Preview-augmented suspension control structures

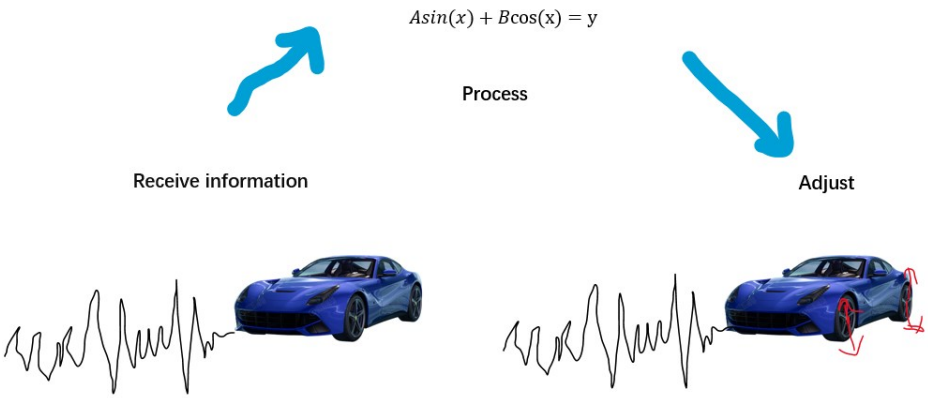

Figure 15: Preview control system

According to the article of Johan Theunissen [12], the Preview-augmented suspension control structures can significantly improve the comfort of the drive. The Preview-augmented suspension control structures (as shown in Fig.15) prepare for the road ahead instead of react to it. The system has various means to receive road information. The sensor in the front of the car can transfer the information to the controller before the task, giving the controller time to adjust. The controller may also use the information gathered by the car ahead or the road situation from the road profile. To develop this technology, the government may need to collect and store the road situation. This technology may also cause harm because of misleading or hack attack.

7. Conclusion

In this article, it includes different suspension system and vibration control system. The active suspension system which is the most important type in the future. As people's life quality been improved, people want to have more comfortable car, so the good suspension system become very important. To this reason, the active suspension system will occupy the main part of the suspension system market. Firstly, since this system can change the stiffness and damper to make the car can drive at different kinds of ground. Secondly, it can consider spring, damper, height these three things together to make sure the stable of the car, which use the AI technology to find the most suitable plan to change the three parts.

In the future, the new materials can be a very promising. Just like the shape memory materials, if people can use it well, it can improve the performance of the suspension system prominently.

DOI: 10.54254/2753-8818/2025.22736

More importantly, no matter how we improve on the old structure, there will be bottlenecks that limit the development of technology. However, if people take a deeper look at new structures such as electromagnetic shock absorbents, it will be had a qualitative leap in overall performance.

References

[1] *Zhang Yiming, Lin Ye. Discussion on a new type of vehicle suspension system-semi-active suspension system with optimal damping control[J]. Automotive Engineering,1988,(No.4)*

[2] *Sun Feng, Zhao Jie, Zhou Ran et.al. Vehicle ride comfort analysis of electromagnetic active suspension based on robust control[J]. Journal of Shenyang University of Technology, 2023, Vol. 45(4):418-427.*

[3] *G. Istenes, F. Szauter and G. Rödönyi, "Vibration analysis of a suspension system subject to high level of measurement noise," 2017 4th International Conference on Control, Decision and Information Technologies (CoDIT), Barcelona, Spain, 2017, pp. 0881-0886, doi: 10.1109/CoDIT.2017.8102707.*

[4] *Yaning Chang, Research on active and passive switchable suspension system for special vehicles, 2019, Jilin University.*

[5] *Hongjun Sun, Zongcai Deng, and Jianhui Li, Application of shape memory alloys in structural seismic reduction and isolation. Building Technology, 2006(02): pp. 143-145.*

[6] *Xiao Ertian, Han Yulin, Li Aiqun, Zhang Zhiqiang, Zhang Xiaoge, Structural Vibration Control and Seismic Time History Analysis Based on Shape Memory Alloy Hyperelastic Dampers. Journal of Southeast University(Natural Science Edition), 2003(05): pp. 605-609.*

[7] *Hongjun Sun, Zongcai Deng, and Jianhui Li, Application of shape memory alloys in structural seismic reduction and isolation. Building Technology, 2006(02): pp. 143-145.*

[8] *UKEssays. (November 2018). Various Types of Suspension Systems Engineering Essay. Retrieved from https://us.ukessays.com/essays/engineering/various-types-of-suspension-systems-engineering-essay.php?vref=1*

[9] *UKEssays. (November 2018). Various Types of Suspension Systems Engineering Essay. Retrieved from https://en. wikipedia.org*

[10] *Mulla, Ansar & Unune, Deepak. (2013). Active Suspensions Future Trend of Automotive Suspensions.*

[11] *Min Yu, Simos A. Evangelou, Daniele Dini. Advances in Active Suspension Systems for Road Vehicles, Engineerin g, Volume 33, 2024, Pages160-177, ISSN2095-8099, (https://www.sciencedirect.com/science/article/pii/S2095809 923003983)*

[12] *Johan Theunissen, Antonio Tota, Patrick Gruber, Miguel Dhaens, Aldo Sorniotti, Preview-based techniques for vehicle suspension control: a state-of-the-art review, Annual Reviews in Control, Volume 51, 2021, Pages206-235, ISSN, 1367-5788, (https://www.sciencedirect.com/science/article/pii/S1367578821000183)*